Start here

Lay out the parts with the screen facing you. Its ribbon exits at the bottom. The ports and keys are on your right.

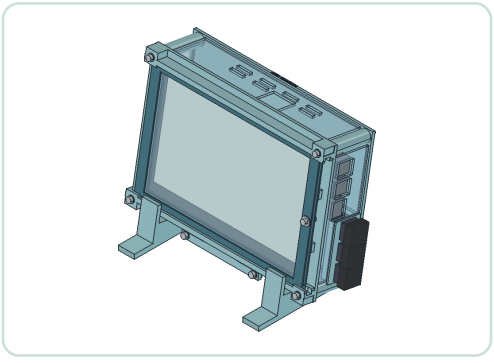

Finished R5, seen from the front

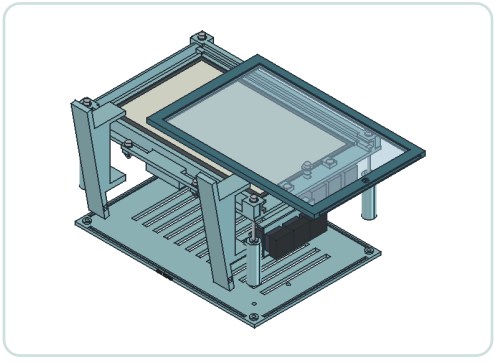

Bezel, front carrier and rear plate

Screws	Goes here	Matching hardware
8 × M2.5×12	Pi and driver	8 nuts + 8 M2.5 washers
2 × M3×12 flat	Glass keepers	2 M3 nuts
2 × M3×12 socket	Ribbon guard	2 M3 nuts + 2 OD7 washers
2 × M3×10 socket	Key carrier	2 M3 nuts + 2 OD7 washers
1 × M3×16 socket	Bezel lock	1 M3 nut + 1 OD9 washer
4 × M3×65 socket	Case corners	4 M3 nuts + 8 OD7 washers

Tools: 2 / 2.5 mm hex, 5 / 5.5 mm nut tools, caliper, soft cloth, cutters, soldering iron, heat-shrink and continuity meter.

First dry fit. Try the empty bezel rails, acrylic slots, nut pockets, switch clips and feet. Try the glass seat with a dummy of matching thickness. Deburr and solder before handling the bare display. Sort the printed parts on pages 2–3, then wire the switches on page 4.

00000376

Sort the frame parts

Match the shape first, then count the pieces. Each picture is enlarged to show its features.

P01 Front carrier ×1

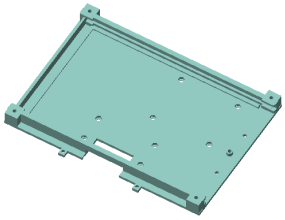

Solid tray with a shallow screen seat, raised rails and four corner ears.

P02 Bezel ×1

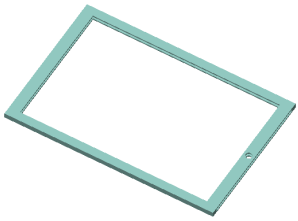

Thin rectangular ring. Its inner groove holds the clear front protector.

P03 Rear plate ×1

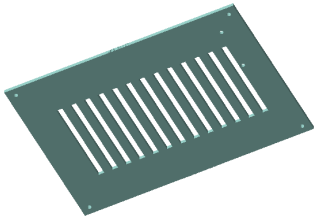

Flat plate with a row of long vents and raised lettering around the edges.

P04 Corner spacer ×4



Long round post, about 42 mm. Raised shoulder faces P01. Recess faces P03.

P08 Ribbon guard ×1

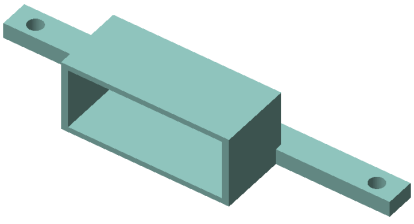

Hollow hood with two screw ears. Goes under the front screen edge.

P11 Foot ×2

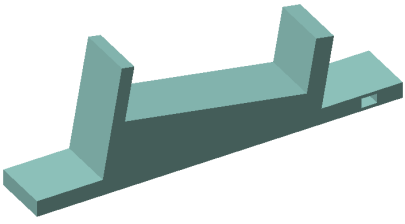

Long 115 mm sole with two upright cheeks. The case drops into the cradle.

Pieces marked C01–C11 in the files are fit-test coupons.

00000376

Sort the small parts

Make the piles below. The stock R5 kit has 23 printed pieces across these two pages.

P05 / P12 Board spacer ×8

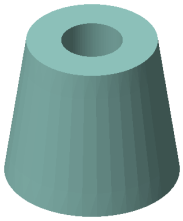

Tapered and hollow, Ø8 × 7 mm. All eight are the same. Use four under each board.

P06 Glass keeper ×2

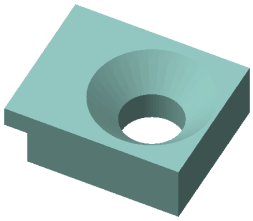

Small stepped tab with a flared screw hole. Its lip faces the glass edge.

P07 Bezel lock bush ×1

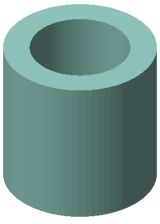

Straight hollow sleeve, Ø5.2 × 5.1 mm. Fits the M3×16 screw.

P09 Key carrier ×1

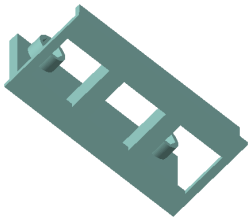

Three square switch holes in a row. Two round holes mount it to P03.

P13 Cable gate ×1

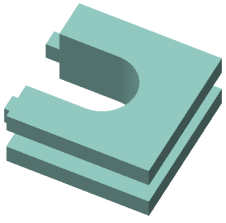

Small U-shaped clip with a slot for the edge of the left acrylic.

Two M3×12 heads



Flat tapered head goes in P06. Tall cylindrical head holds P08.

The stock R5 release skips P10.

00000376

Wire the three keys

Do this soldering before the glass goes in. Work with P09 detached and power unplugged.

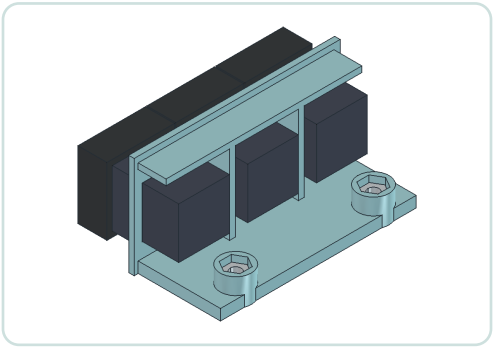

Inside of P09 with three switches

Toward pins 1 and 2

27	28
29	30
31	32
33	**34**
35	36
37	38
39	40

Pi header, last seven rows

1. Drop two M3 nuts into the P09 pockets from its open side. Clip in three MX switches, top to bottom as shown in the table. Solder one signal wire to each switch. Join the other three terminals with **two short ground bridges** and one long ground wire. Heat-shrink all six joints.

Key position	BCM GPIO	Pi physical pin
Top / LEFT	5	29
Middle / AMEN	6	31
Bottom / RIGHT	13	33
Common ground	GND	34

2. Meter each signal against common ground. It should be open at rest and close only when its own key is pressed. The harness has four Pi plugs and uses no 5 V pin.

3. Fit P09 **inside the rear plate**. Drive two M3×10 socket screws with OD7 washers from the outside into the captive nuts. Fit the caps. Leave **70 mm service slack** when plugging into the Pi.

00000376

Mount boards, then glass

P01 is the main carrier. The shallow display seat faces you. The Pi and Waveshare driver mount on the back.

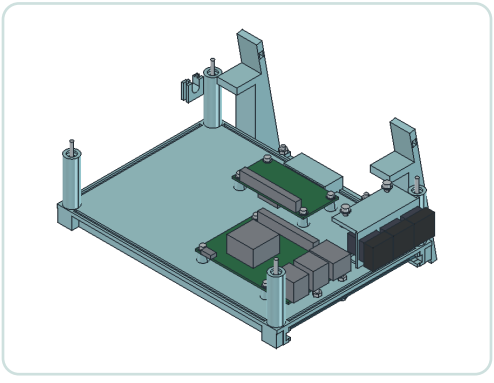

Back of P01 with both boards

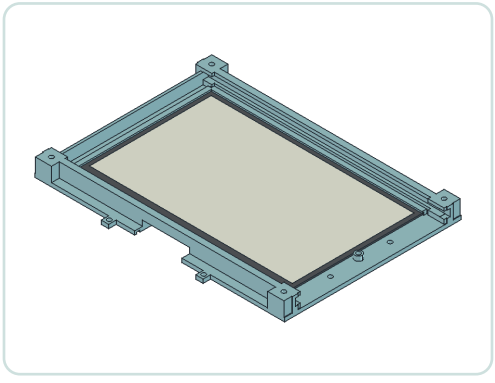

Display seated under three fixed lips

1. **Load all 8 M2.5 nuts from the display side.** They must sit fully recessed. The glass covers them.
2. Use four of the **identical tapered 7 mm spacers** under each board, wide end against P01. From the back, run an M2.5×12 socket screw and washer through each board and spacer. Pi components face the rear. Driver components face P01, ribbon socket down.
3. Check screw tips clear the glass. Lay four loose **22 × 9 × 0.5 mm silicone pads** flat, one near each corner on a safe support zone. Leave the two right keepers off while sliding the screen gently in **from the right**, ribbon down.
4. Fit both **P06 keepers** with flat DIN 7991 M3×12 screws from the front and nuts behind. Heads sit flush. Keeper feet seat on PETG. Their lips retain the screen without pressing it.

Stop if anything binds. R5 expects a raw panel around 170.2 × 111.2 × 1.18 mm. The panel should stay retained with the bezel off.

00000376

Connect and test the screen

Leave the rear, bezel and ribbon guard off until the ribbon and driver connections are checked.

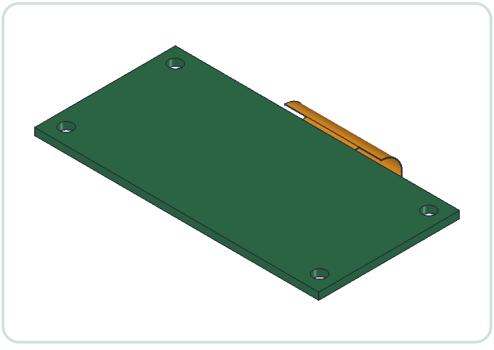

Ribbon path with guard removed

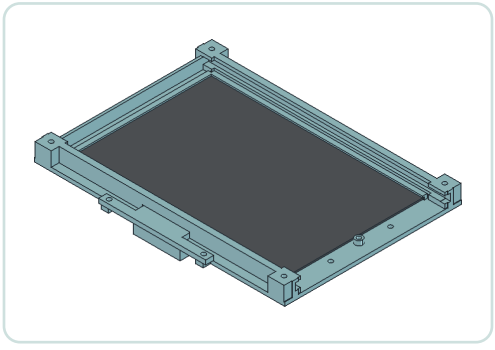

P08 guard seats from below

1. With power unplugged, guide the raw ribbon through the **open lower corridor**. Open the driver latch, confirm the contact side, seat the tail straight and close the latch. The route must be relaxed and uncreased.

2. Connect the supplied **driver-to-GPIO lead**. Match signals by the actual board labels and its revision diagram. Use Waveshare driver revision notes for the supplied connector and power wiring.

Signal	Pi physical	Signal	Pi physical
DIN / MOSI	19	CLK / SCLK	23
CS	24	DC	22
RST	11	BUSY	18
PWR if present	12	VCC / GND	Board diagram

3. Insert the Pi's boot media, then connect the official USB-C supply. Check that the physical display actually changes. Shut down and unplug before fitting **P08**. Use two socket-head M3×12 screws and washers from the front, nuts behind the ears. The guard must clear the ribbon.

Waveshare 7.5-inch V2 setup and SPI pinout

Slide in the acrylic

The front protector rides inside the bezel. The four side sheets sit in grooves between P01 and P03.

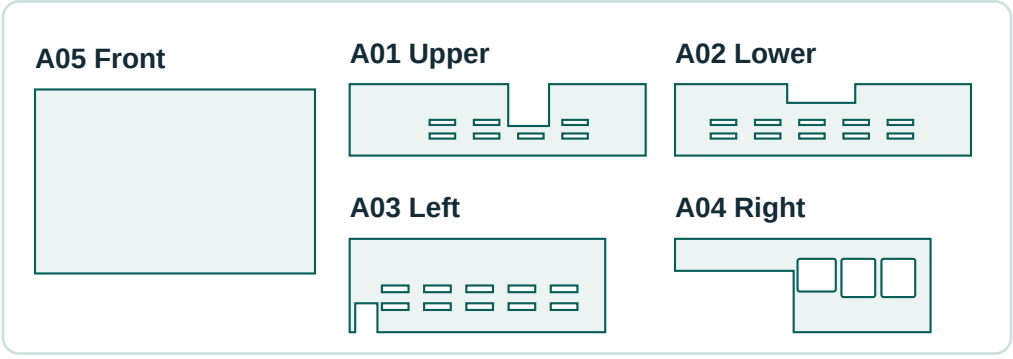

1. With the bezel off, slide plain **A05** into its own groove from the right. Slide **P02** into the carrier rails from the right until it meets the left stop. The acrylic floats above the glass.
2. Line up the right-side lock hole. Insert **P07 bush**, then the **OD9 washer** and M3×16 socket screw. Hold the M3 nut on the electronics side. Remove all three loose lock pieces before sliding either part for service.

Panel	Identify it	Outside, mm
A01 Upper	Power notch + vents	174 × 42
A02 Lower	Vents + guard clearance	174 × 42
A03 Left	Low gate notch	115 × 42
A04 Right	USB/Ethernet cutouts	115 × 42
A05 Front	Solid clear rectangle	172 × 113

Keep A01–A04 within reach. Their front edges slide into P01 before the rear goes on. The open notches in A03 and A04 face the rear.

00000376

Close the case and boot

Keep the rear supported until the button leads are connected and checked.

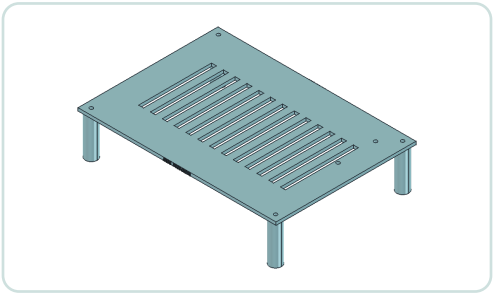

P03 rear and four P04 spacers

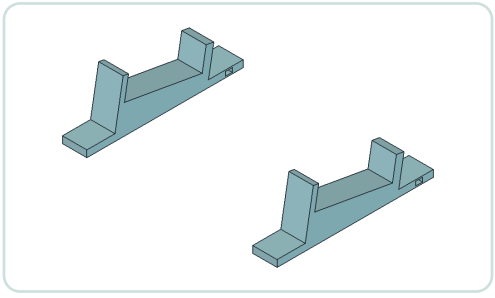

Two identical P11 feet

1. Fit four **P04 spacers**. Feed four M3×65 bolts with OD7 washers from the front. Insert A01–A04 into the front grooves. Seat **P13** around A03's low notch, even if the low outlet is unused.
2. Plug in the button leads. Test all three keys while open, then shut down and unplug. Keep slack clear of the heatsink and edges. Bring the rear straight in so **P09 enters A04's notch** and P03 captures the sheets.
3. Add an OD7 washer and M3 nut at each rear corner. Tighten evenly and gently onto the spacers. Check the glass, acrylic and ribbon are free of pressure. Drop the case into both **P11 feet** so they support the PETG frame.
4. Use the official straight USB-C lead through the **upper entry**. Loop it loosely down the outside rear. A01 can stay off temporarily for access. Plug in power and verify the physical dashboard, all three keys, port access and stability.

If something fails: reopen with power disconnected. For a blank screen, check ribbon seating, SPI wiring and the Pi's SPI setting. For a dead key, recheck physical pins 29/31/33 and ground 34.

00000376