Pokapapaj 2137 / R4

Protected ribbon, fitted I/O and three clicky controls

@$FAB8D060BB58CECD678C7481F594DD00

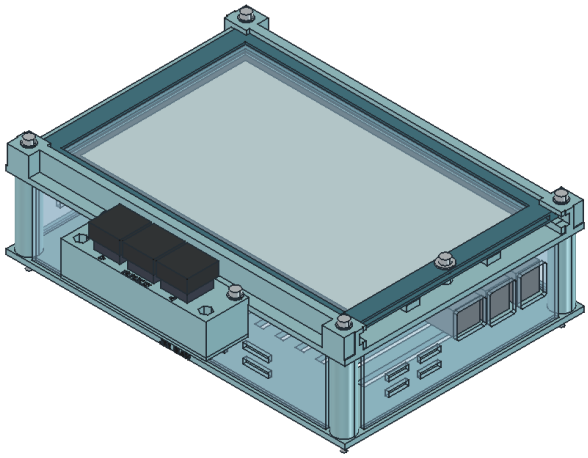

CLOSED: one-piece acrylic I/O side, protected flex and three full-height keys.

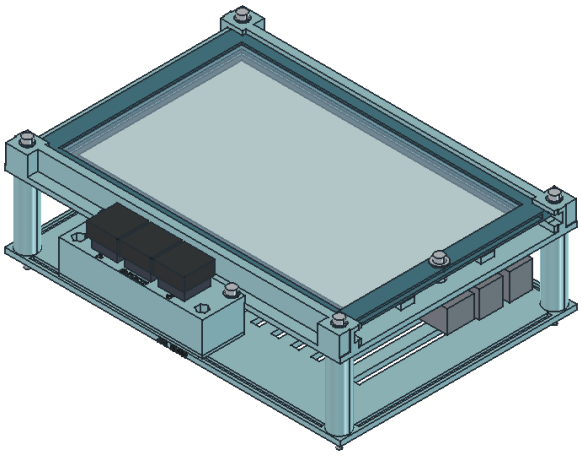

OPEN: the same load-bearing frame, without side sheets.

The middle screw is the removable bezel lock. R4 moves it inward to X=89.1 mm; it does not pass through any acrylic. The side-sheet inner face is X=96.5 mm, leaving 2.9 mm to the 9 mm lock washer.

A separate 172 x 113 x 2 mm clear front protector slides into the bezel from the right. It has no drilled holes and sits 3.6 mm above the nominal screen face. It is a scratch guard; impact strength has not been tested.

This is a measured-fit prototype. Validate the real panel, driver revision, cables and printed coupons before full-size printing. CAD clearance does not prove physical fit or safe glass loading.

01 / Know the directions

Viewer side versus electronics side

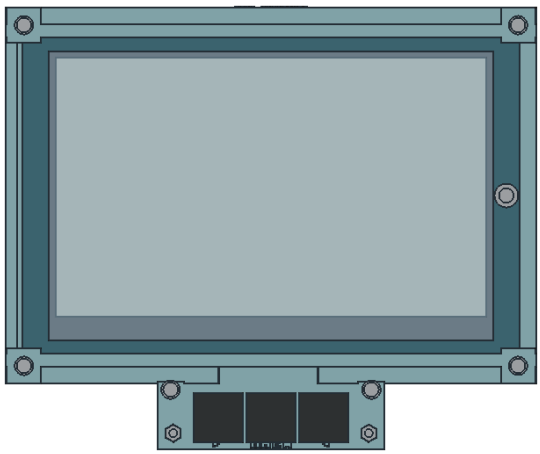

Viewer looking toward the display: +Y at top, +X at right.

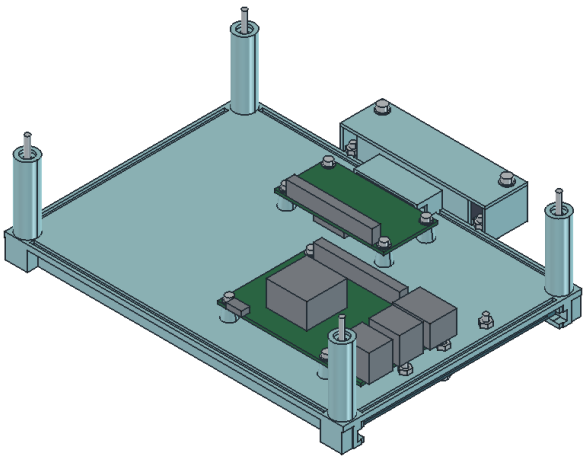

Rear removed: electronics are behind the solid support plate.

Global XY is the display plane. +Z points toward the viewer; electronics and the rear plate are in -Z. The raw panel flex leaves the LOWER edge (-Y).

Bezel and protector removal: +X, to the right when seen from the front. Installation: -X. Reserve 192 mm for the complete bezel service stroke and 184 mm for protector removal.

P01 is the display-bearing carrier. P03 is the removable rear. P04 x4 are the long compression spacers. The four P05 Pi and four P12 driver standoffs support the two boards independently. The display never supports a PCB.

02 / Measure and print coupons

Do this before the long prints

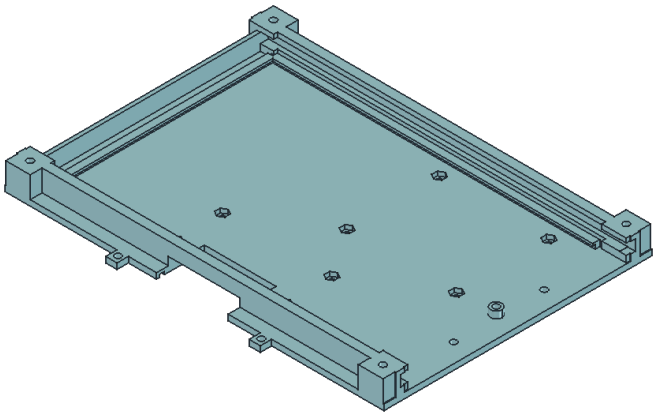

Carrier: three fixed retaining edges, open loading side at right.

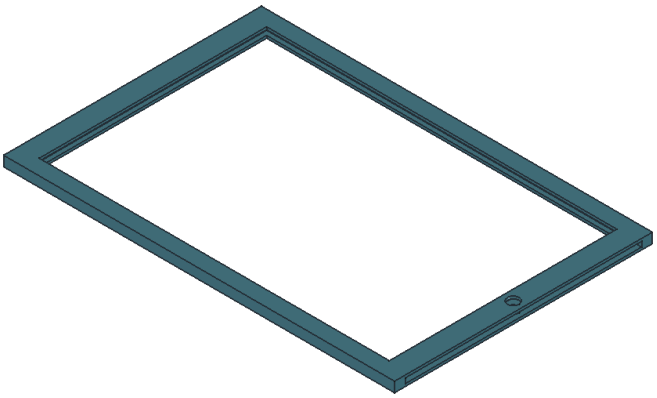

Bezel: screen window, front-cover groove and inboard lock hole.

Baseline raw panel: 170.2 x 111.2 x 1.18 mm, active area 163.2 x 97.92 mm. A larger laminated 177.2 x 118.2 mm module is a different profile. Measure the delivered unit, its safe border and pad-bearing areas.

Driver mount assumes Rev2.3, 65 x 32.2 mm, four independent holes. The selected kit description says JST PH2.0 8P; the current manufacturer drawing shows another revision. Inspect the delivered board and lead before printing P01. Do not force a mismatched board onto these holes.

Print rail coupons C01-C03, one matching tongue, C05 holes/nuts, C04 side slots and C09 front-cover slots using the final PETG settings. C09 notch counts 1/2/3 mean 0.15/0.20/0.25 mm per face. Measure actual acrylic thickness and choose a free sliding fit.

Print quantities: P01 1, P02 1, P03 1, P04 4, P05 4, P06 2, P07 1, P08 1, P09 1, P12 4. C10 tests the switch clip opening. Keep support out of bores. Clean the accessible rail/protector overhangs before installing glass; never drill or sand near installed electronics.

03 / Install the board hardware

Load the recessed nuts before the glass

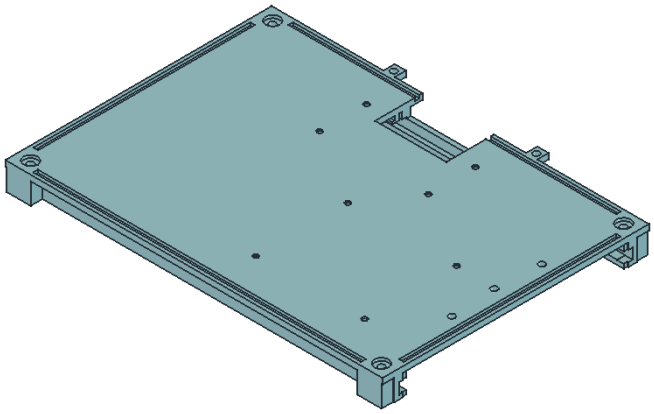

Electronics face: separate Pi and driver patterns.

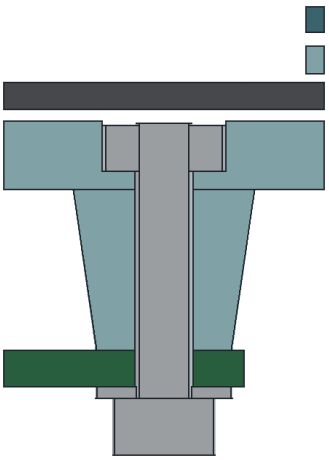

Section through an actual board screw, nut, support plate and glass.

Place all EIGHT ordinary M2.5 nuts in the carrier hex pockets from the display side. Each must sit fully recessed. These nuts become inaccessible once the panel is installed.

Fit four printed 7 mm standoffs per PCB. Use eight M2.5 x 12 socket screws, each with a 0.5 mm plain washer. Screws enter from the rear PCB face, through the PCB and standoff into the recessed nuts.

Pi components/heatsink face the internal rear volume (-Z). The separate driver components face the carrier, with its FPC at the lower corridor. Confirm actual component clearances and bare mounting lands.

Nominal screw tip Z=2.9 mm; glass back Z=3.5 mm: 0.6 mm clearance. Recheck every real screw, PCB and washer stack. Tighten lightly to the support lands; do not crush PCB or PETG.

04 / Seat and retain the display

The bezel is not the glass support

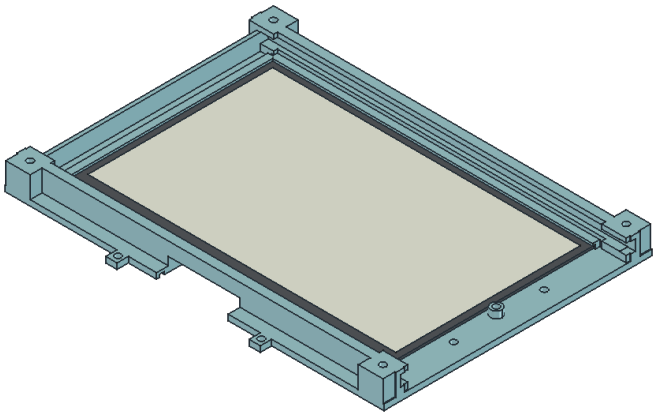

Raw panel installed under the three fixed lips.

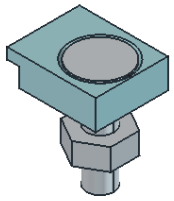

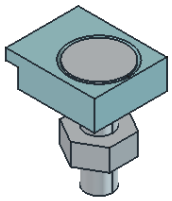

Two independent right-edge keepers and their hardware.

Leave both right keepers off. Place four loose, unglued 22 x 9 x 0.5 mm silicone pads at the modeled support locations; confirm those locations are permitted on the real display.

With flex at the lower edge, slide the raw panel gently from +X under the left, upper and lower lips. Never bend glass or use screw force to seat it. Trial fit with a dummy of measured thickness first.

Install two P06 keepers with M3 x 12 DIN 7991 countersunk screws from the front, ordinary M3 nuts from the rear. Head diameter is 6 mm, nominal height 1.7 mm; ISO 10642 substitutions may have larger heads.

The keeper feet tighten against the carrier. Their lips must retain without preloading glass. Confirm no pad wrinkle, screw tip, burr or lip presses the active panel. The panel must remain independently retained when the bezel is removed.

05 / Wire and test while open

Keep the flex relaxed and the latch accessible

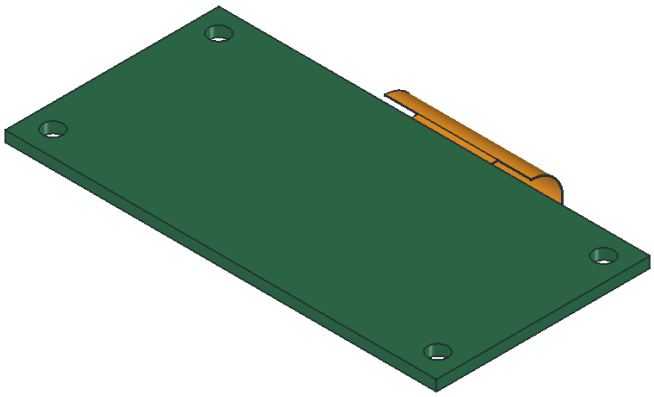

Guard removed: orange is the nominal raw tail and driver connection.

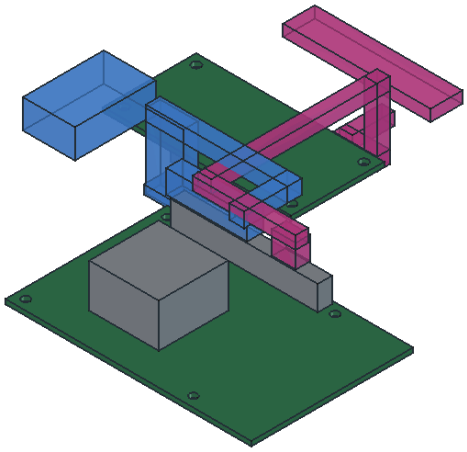

Blue: display GPIO lead. Magenta: independent button harness.

Route the raw tail through the ALREADY OPEN lower-edge corridor. Connect it at the nearby driver latch. A completed connector is never pulled through a closed hole.

Confirm contact side, latch opening, cable length and a gentle, uncreased route on the real parts. The model does not prove a safe bend radius or adequate free flex length. Stop if tension or folding is needed.

Use the matching supplied driver-to-GPIO cable and the exact revision pinout. The nominal GH route budgets 135 mm plus 35 mm slack; the current kit lists about 200 mm, but verify the delivered lead. Keep cables away from bolt bores, the heatsink and bezel sweep.

Test the display with the official external 5.1 V / 3 A USB-C PSU before fitting the bezel. Disconnect power again before completing mechanical assembly. The mains adapter stays outside the enclosure.

R4 / Protect the ribbon

Connect first; fit the cover over the relaxed route

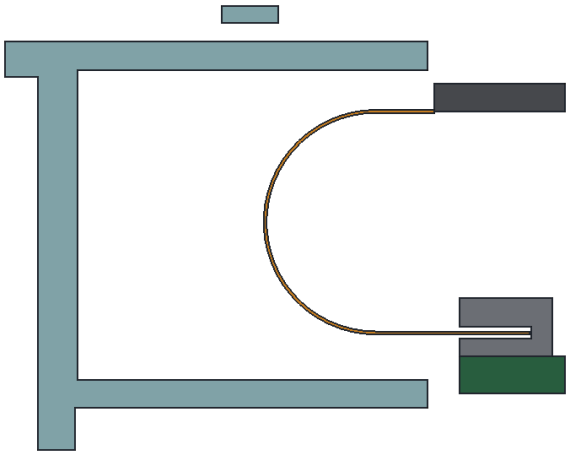

Actual CAD section: orange tail turns rearward inside the roof, floor and walls.

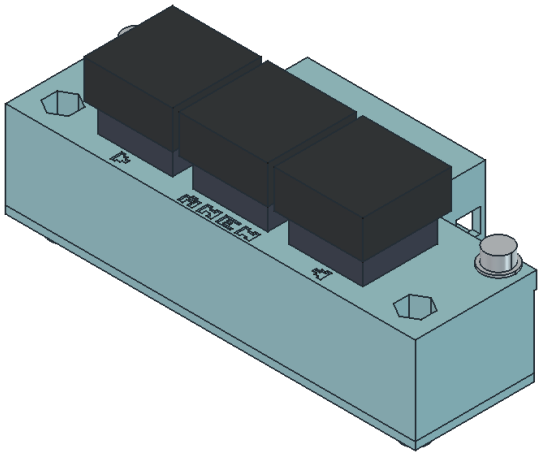

The flex hood and key housing form one removable printed P08 part.

The nominal path uses 2.5 mm of straight root, a 180-degree rearward turn at radius 4.75 mm, and 6.577 mm straight into the connector, including 3 mm assumed insertion. Total: 24 mm. This is a layout from the drawing, not a verified permitted bend radius or usable free length.

With P08 removed, confirm real contact side, stiffener length, root plane and latch entry. Connect the tail without pulling or creasing it. Offer P08 toward +Y from below; its feet must seat freely before tightening. The hood must not touch the ribbon or press the glass edge.

Two M3x12 socket screws with plain washers enter the pod feet from the front; two ordinary M3 nuts sit below the carrier ears. The guard roof stays 0.4 mm below the bezel sweep at baseline. Normal ventilation stays open.

For service remove the rear, unplug the four button leads, remove the two pod mounts, and withdraw the pod toward -Y. The raw ribbon stays connected. Never use the pod or its wires to pull the display tail.

R4 / Three clicky controls

[left] [amen] [right]

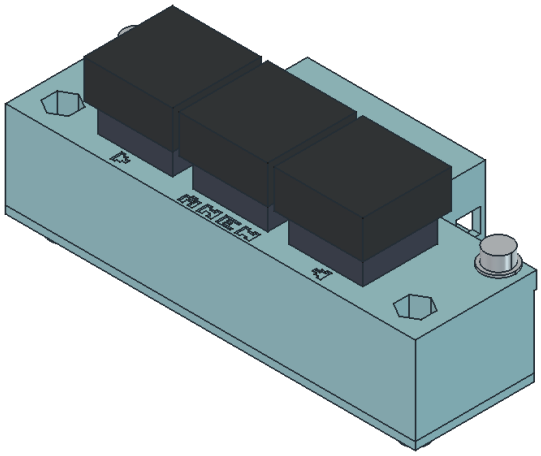

Switches clip into the 1.5 mm plate; plain 1U caps pull off separately.

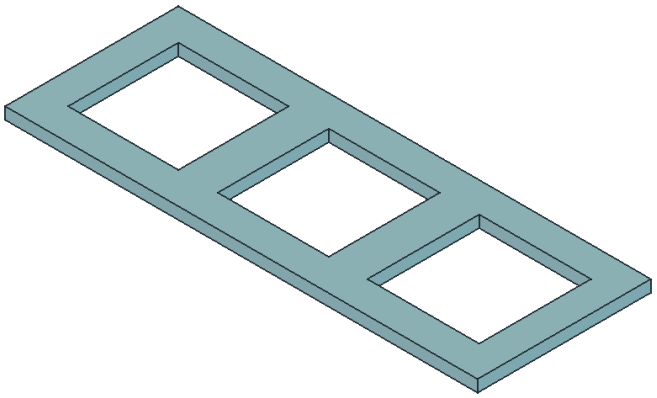

C10: 14.0 / 14.1 / 14.2 mm square openings, left to right.

Use three full-height clicky MX-compatible switches (Gateron Blue G Pro 3.0) and three removable DSA 1U caps. Test the actual clips in C10 before printing P08. The nominal key pitch is 20 mm. LEFT / AMEN / RIGHT are shallow frame legends; no custom cap printing is required. Purchase ten switches (two five-packs) and six black FalbaTech DSA caps; only three of each are installed.

Solder with the pod detached, away from the screen. One switch terminal goes to its own GPIO wire; the other joins common ground. Insulate all six joints. Leave slack below the terminals and keep joints off the lid and nut bosses. No keyboard PCB, diode matrix or LED wiring is used.

Load two M3 nuts through the front hex pockets at the outer ends of P08. Close P09 from the rear using two M3x10 socket screws and two plain washers. Check each key returns fully and no terminal or wire touches a screw.

P08 STL is control-face down; remove any supports through the open rear/interior hood opening before electronics. P09 prints flat. The cover is removable for inspection; it is not glued.

R4 / Wire the controls

Four wires and independent GPIO inputs

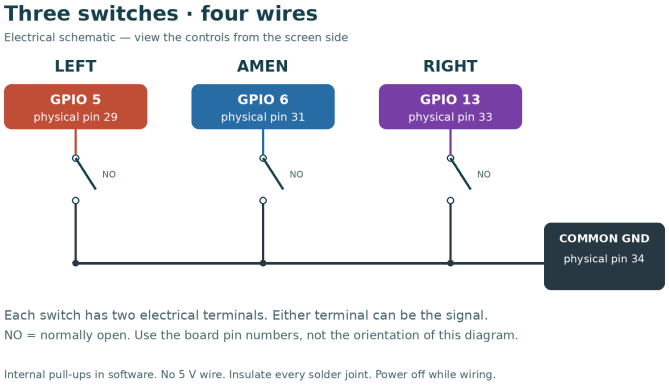

Electrical connections: two contacts per switch, shared ground; no power wire.

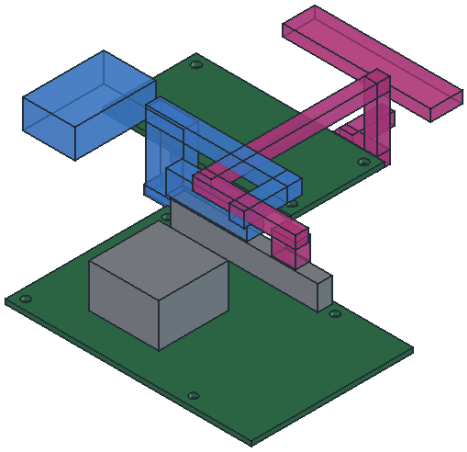

Both harnesses stay behind the boards and clear of the CPU/heatsink.

LEFT: GPIO5, physical pin29. AMEN: GPIO6, physical pin31. RIGHT: GPIO13, physical pin33. Common ground: physical pin34. Each normally-open switch connects its signal to ground only when pressed. These GPIOs are separate from the display pinout.

Use four owned 30 cm female jumper leads, cutting one end off for soldering. Add two short ground links. Keep at least 30 mm service slack and gently bundle only insulated wires. Do not tie or clamp the bare panel flex. Keep the rear independent of the harness.

Pass through the internal pod opening near X13/Y-71, then out the hood side at Y-59.5. Descend behind the PCB near X24, run toward Y0, then across to the Pi header. Magenta CAD volumes reserve this route; round the actual wire bends gently inside them.

With power off, continuity-test the three contacts and check for shorts. Run source/buttons.py on the Pi with gpiozero: it prints left/amen/right and uses 30 ms debounce. It is an integration helper, not a complete display application; no hardware test was performed here.

06 / Fit the protective acrylic

Two sliding parts, two different grooves

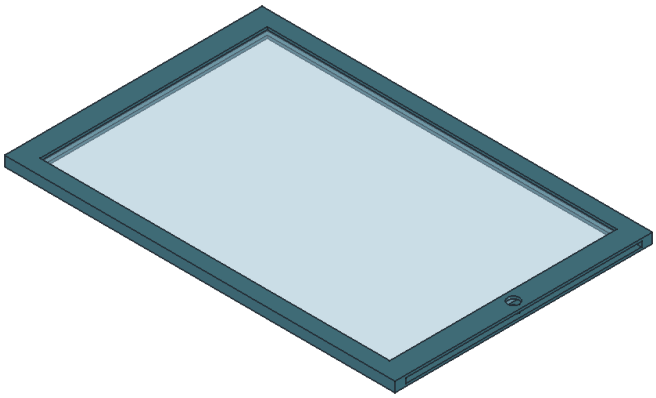

Front protector captured by the separate groove inside P02.

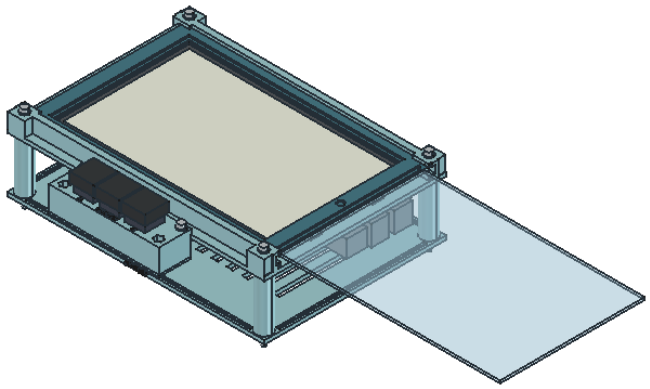

Protector alone withdrawn to +X; the bezel remains in its rails.

Cut A05 to 172 x 113 mm from measured 2 mm clear PMMA, with no holes. Deburr edges and test with the C09 groove coupon. Remove protective film only after fitting and clean without abrasive pressure.

Remove the M3 x 16 lock screw, large washer AND P07 bush. Slide the protector into the bezel groove from +X until it reaches the closed left end. The cover is 1.8 mm larger than the raw panel in each full dimension.

The front cover is not laminated to the display. Nominal back Z=8.28 mm, screen front Z=4.68 mm, giving 3.6 mm air gap. The ring floor/roof lips are each 1.2 mm and the cover slot has 0.2 mm space per face.

Hold the bezel while sliding the cover. With the bush removed both cover and bezel can move to the right. Do not let either loose part slide out unexpectedly.

07 / Install and lock the bezel

Remove all three loose lock pieces for service

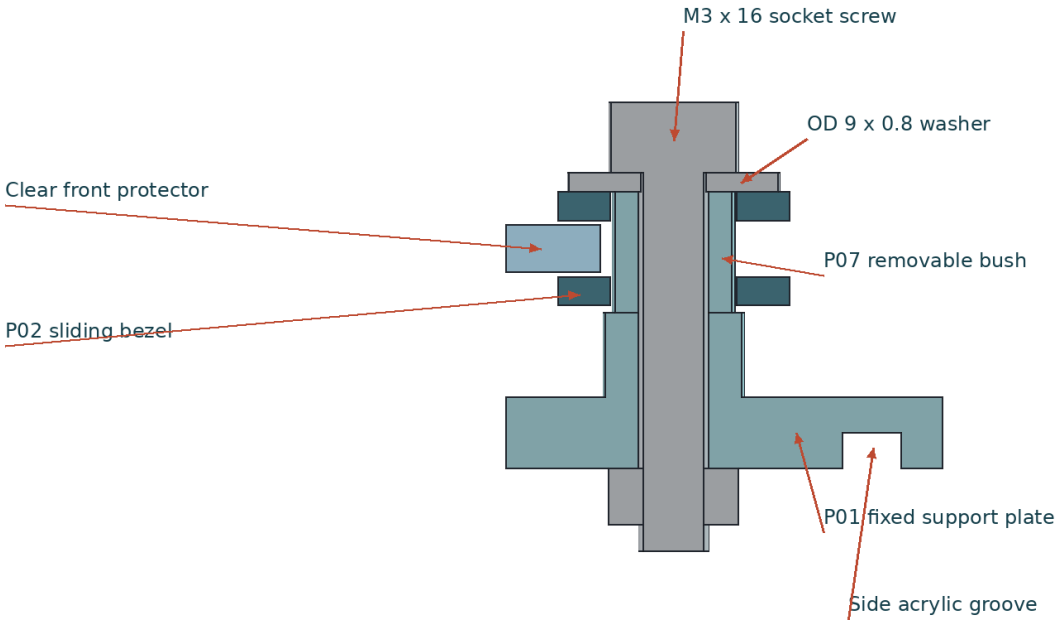

Actual CAD section, viewer above. Remove screw, washer AND bush before sliding.

Actual CAD section through the inboard lock and protector edge. Remove screw, washer AND bush for service.

Slide P02 in from +X through the top and bottom C rails until it meets the fixed left stop. It travels above the glass and independent keepers. It must slide smoothly without touching either.

Align the inboard bezel hole with the low carrier boss. Insert P07, the removable OD 5.2 mm bush, around the M3 screw. Fit the 3.2 x 9 x 0.8 mm DIN 9021 washer and M3 x 16 socket screw, with an ordinary M3 nut below the carrier.

P07 passes into the bezel hole and blocks its travel; its side also blocks the front acrylic from escaping through the open right edge. The washer bears on the bush. Do not use a normal 7 mm washer here.

For either sliding service operation, remove the screw, washer AND bush. The low fixed boss stays below the sweep. Nominal cover end play is 0.5 mm; nominal radial bezel-hole play around the bush is 0.2 mm.

08 / Close the open frame

Exactly four primary tie bolts

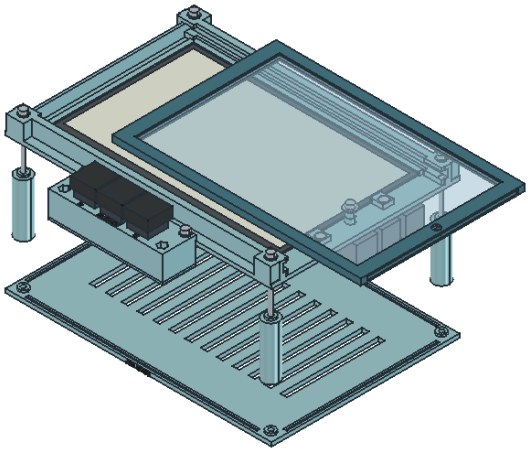

Structural halves separated: carrier above, rear below.

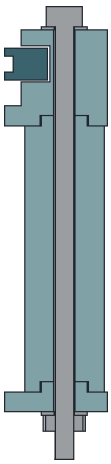

Corner section: washers, compression spacer and accessible rear nut.

Seat four P04 front shoulders in the carrier underside sockets. Offer P03 so its four bosses enter the spacer rear sockets. Keep shoulders aligned; do not draw a misaligned joint together with screws.

Use FOUR M3 x 65 ISO 4762 socket screws. One 3.2 x 7 x 0.5 mm plain washer goes below each head, then the bolt passes through carrier, spacer and rear. Add one more plain washer and ordinary M3 nut at each rear corner.

Baseline under-head-to-nut-outer-face stack is 60.78 mm, leaving 4.22 mm tip protrusion with 65 mm bolts. At least 18 mm of end thread is required; fully threaded bolts also fit. R1 60 mm bolts are too short for this thicker R4 bezel.

Tighten lightly and alternately while holding the rear nuts with a 5.5 mm tool. Printed compression spacers stop the joint. Neither glass nor acrylic may carry the clamp load. Check USB-C, USB/Ethernet and cooling access before adding side panels.

09 / Add the four optional sides

The rear comes off; the display stays installed

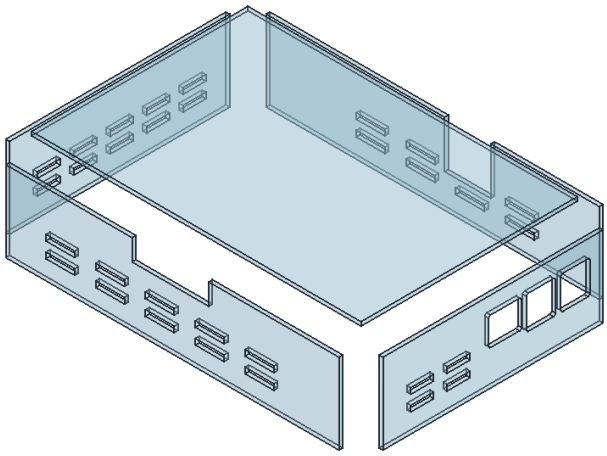

Four independent sides plus front protector; no acrylic screw holes.

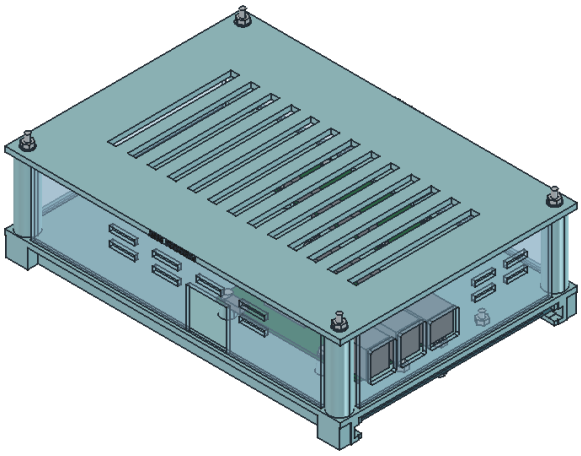

Assembled CLOSED configuration; corner gaps remain open for ventilation.

Power off and unplug external cables. Support the device on a padded perimeter fixture, without loading the screen. Remove the four rear nuts/washers and move the rear straight in -Z. Hold the spacers in their front sockets.

Insert each side from the open rear, front edge first into its carrier groove. A01 is upper (+Y), with the USB-C notch. A02 lower and A03 left have different vent patterns. A04 right (+X) is one continuous sheet with three USB/Ethernet apertures; see the next page.

Long side blanks are 174 x 42 x 2 mm; short side blanks 115 x 42 x 2 mm, before the supplied notches/vents. Use each named DXF/SVG CUT layer at 1:1 mm. LABEL and SCALE layers must not be cut. Baseline kerf compensation is zero.

Offer the rear in +Z so all four grooves receive their rear edges while bosses locate in spacers. Panels have 1 mm total axial slack. Refit the same hardware; no board or flex is disconnected. Never use bolts to force a binding sheet into place.

R4 / One-piece plexi side

Three port windows; no separate shield or panel screws

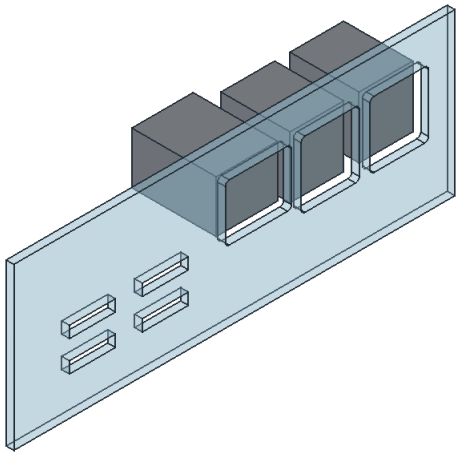

A04 and Pi sockets: the sheet slides forward from the open rear.

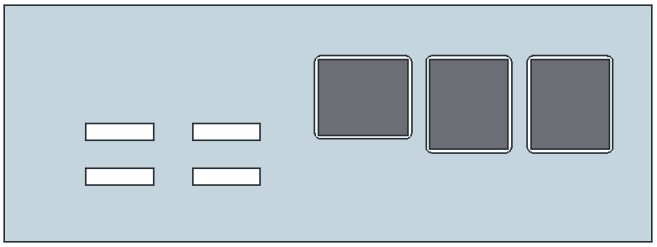

Closed side: two USB-stack windows and one Ethernet window.

A04 is 115 x 42 x 2 mm with three radius-1 mm port apertures. Use its R4 DXF/SVG at 1:1 mm. P10/P11 are deleted, along with two screws, two nuts and two washers. The side carries no bolt clamp load.

R4 moves the Pi inward to PiX=7.0 mm. At 2 mm acrylic, USB and Ethernet socket noses are 1.5 and 1.0 mm inside the sheet inner face. Disconnect external cables, remove the rear and insert the whole sheet in +Z. Check the full travel with a cardboard template first.

USB faces are 3.5 mm and Ethernet 3.0 mm behind the acrylic outer face. Direct plugs are intended. Test full insertion, molded plug shoulders and Ethernet latch release with actual cables before closing; no extension is specified.

The opening on the upper A01 sheet is USB-C power access: 24 mm wide, with the socket 15.5 mm recessed. It lets the official PSU plug reach the Pi. Test the real molding and finger grip in the reserved 22 x 14 mm path. Unplug external cables for transport.

10 / Service and final acceptance

What remains assembled in each operation



Protector captured by bezel lips, with an air gap below.

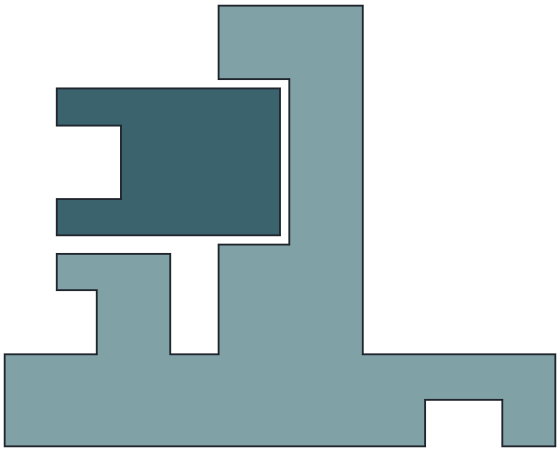

Separate outer rail captures the printed bezel.

Front protector replacement: power off, remove lock screw/washer/bush, hold the bezel, slide only acrylic +X. Refit all three lock pieces. Main bolts and boards remain.

Bezel service: remove those same three lock pieces and slide bezel plus cover +X. Fixed lips and keepers retain the raw panel. All four main tie bolts can stay in place.

MicroSD service: remove rear, then use the reserved extraction space. Board removal: rear off, withdraw each board screw while holding its loose standoff. Nut replacement requires removing the raw panel safely first.

Verify every port with the actual plug and strain relief. Log Pi temperature, ambient, undervoltage/throttling flags and workload OPEN, then CLOSED until stable. No physical print, strength, impact, thermal or real cable-route test has been performed by this CAD process.

11 / Hardware and working files

Use the exact revision-matched shopping list

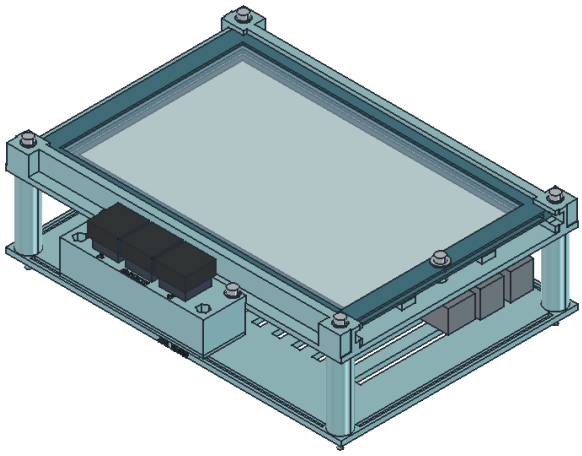

Completed OPEN assembly; four side panels omitted.

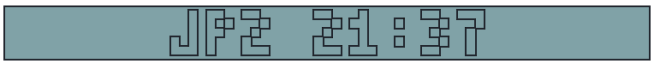

Raised JP2 21:37 on the outer rear edge; no removed plate material.

Installed CLOSED hardware: 4 x M3x65, 8 x M2.5x12, 2 x M3x12 DIN7991, 1 x M3x16, 2 x M3x12 socket and 2 x M3x10 socket screws. Also 11 M3 nuts, 8 M2.5 nuts, 12 M3 plain washers, 8 M2.5 plain washers and 1 M3 large OD9 x 0.8 washer.

Also obtain the matched 7.5-inch display/driver/lead kit, external official Pi4 PSU, clear acrylic and 0.5 mm silicone sheet. Pi, PETG and jumper leads are already owned. SHOPPING_LIST.md separates installed quantities, purchase quantities and optional tools/SD/heatsink.

Cosmetic POKAPAPAJ 2137 / JP2 21:37 legends sit on the vertical rear edges. The flat print face, mating surfaces, vents and bearing faces stay clear. Relief is 0.4 mm; pixel pitch is 0.5 mm and strokes are 0.54 mm. Print a small-detail sample.

Editable master: Pokapapaj_2137.FCStd. Final printed parts live under PrintedParts; OptionalAcrylic contains A01-A05. Parameters column B controls geometry. Blue cells are calculated. Alternate native views are under AssemblyViews.

Changing FCStd does not regenerate existing STL/STEP/DXF/SVG files. Preserve edited masters; export final solids manually or copy changed inputs to source/build.py and rebuild a matched package. Read VALIDATION.md for executed checks and remaining real-hardware gates.