Pokapapaj 2137 / R5

Upright display · sideways keys · removable feet

@$D440DE98372E60A6E8B1C280914E4B35

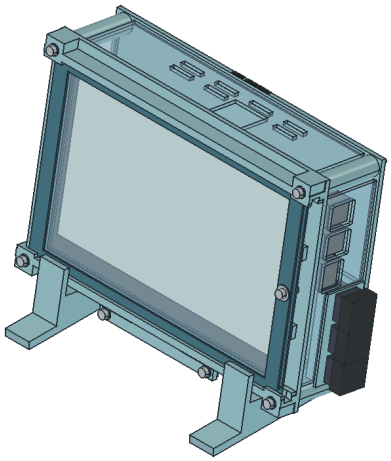

Upright R5: a thin side face, with the switch bodies inside.

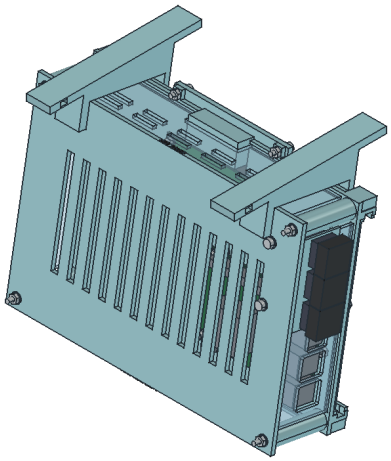

Two rear screws secure the internal button carrier; feet are removable.

R5 places the three switches on the right, facing outward beside the Pi USB and Ethernet ports. The switch bodies and wiring are inside the enclosure; only the key assemblies project. Top to bottom: LEFT, AMEN, RIGHT. The raw display ribbon retains its own independent cover.

The two 115 mm feet lift the ribbon cover clear of the desk. The low cable gate sits on the opposite, lower-left side. Tie an external cable loosely to a foot to reduce pull at the plug; stability against a tug still needs a physical trial.

This is a measured-fit prototype, not a tested physical assembly. Check the delivered boards, screen, switch clips, cable lengths and all printed coupons before full printing. Keep R4 and R5 revision-specific parts separate.

01 / Know the directions

Viewer side versus electronics side

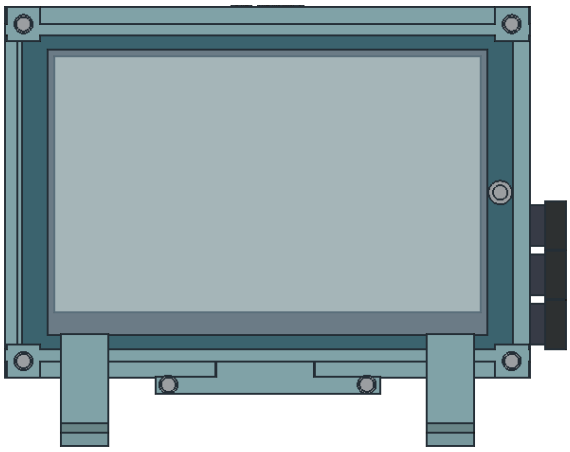

Viewer looking toward the display: +Y at top, +X at right.

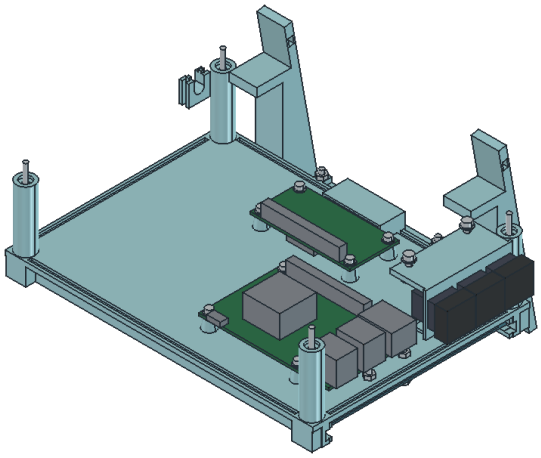

Rear removed: electronics are behind the solid support plate.

Global XY is the display plane. +Z points toward the viewer; electronics and the rear plate are in -Z. The raw panel flex leaves the LOWER edge (-Y).

Bezel and protector removal: +X, to the right when seen from the front. Installation: -X. Reserve 206 mm for the complete bezel service stroke and 184 mm for protector removal.

P01 is the display-bearing carrier. P03 is the removable rear. P04 x4 are the long compression spacers. The four P05 Pi and four P12 driver standoffs support the two boards independently. The display never supports a PCB.

02 / Measure and print coupons

Do this before the long prints

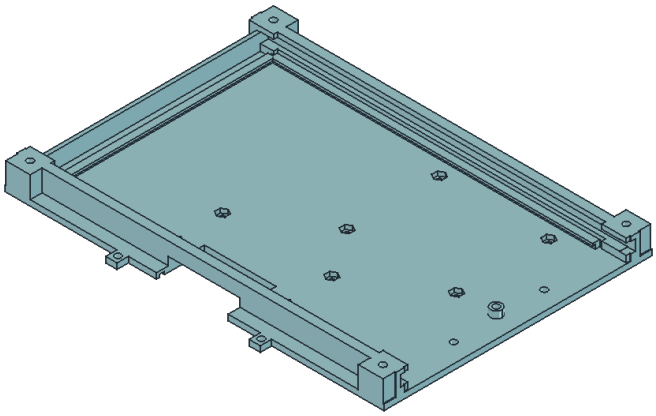

Carrier: three fixed retaining edges, open loading side at right.

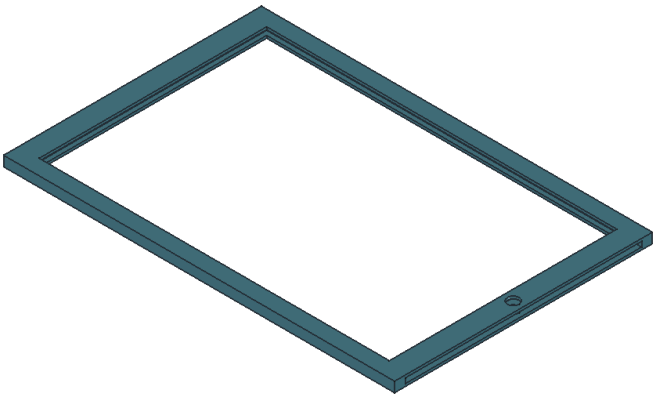

Bezel: screen window, front-cover groove and inboard lock hole.

Baseline raw panel: 170.2 x 111.2 x 1.18 mm, active area 163.2 x 97.92 mm. A larger laminated 177.2 x 118.2 mm module is a different profile. Measure the delivered unit, its safe border and pad-bearing areas.

Driver mount assumes Rev2.3, 65 x 32.2 mm, four independent holes. The selected kit description says JST PH2.0 8P; the current manufacturer drawing shows another revision. Inspect the delivered board and lead before printing P01. Do not force a mismatched board onto these holes.

Print rail coupons C01-C03, one matching tongue, C05 holes/nuts, C04 side slots and C09 front-cover slots using the final PETG settings. C09 notch counts 1/2/3 mean 0.15/0.20/0.25 mm per face. Measure actual acrylic thickness and choose a free sliding fit.

Print quantities: P01 1, P02 1, P03 1, P04 4, P05 4, P06 2, P07 1, P08 1, P09 1, P11 2, P12 4, P13 1: 23 pieces. P10 is not used. C10 tests switch clips; C11 is a thin section of the actual foot. Keep support out of holes and remove burrs before installing glass.

03 / Install the board hardware

Load the recessed nuts before the glass

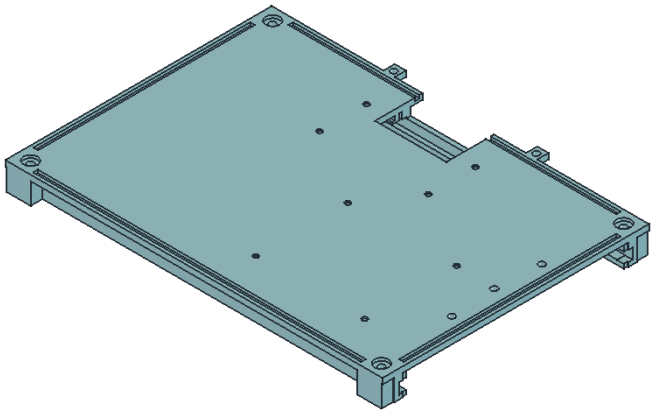

Electronics face: separate Pi and driver patterns.

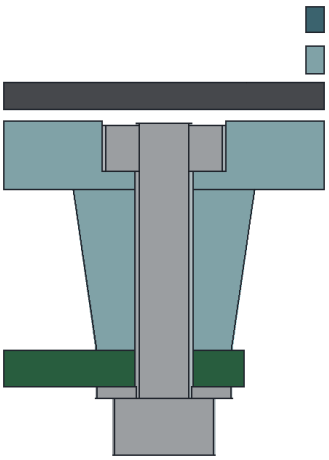

Section through an actual board screw, nut, support plate and glass.

Place all EIGHT ordinary M2.5 nuts in the carrier hex pockets from the display side. Each must sit fully recessed. These nuts become inaccessible once the panel is installed.

Fit four printed 7 mm standoffs per PCB. Use eight M2.5 x 12 socket screws, each with a 0.5 mm plain washer. Screws enter from the rear PCB face, through the PCB and standoff into the recessed nuts.

Pi components/heatsink face the internal rear volume (-Z). The separate driver components face the carrier, with its FPC at the lower corridor. Confirm actual component clearances and bare mounting lands.

Nominal screw tip Z=2.9 mm; glass back Z=3.5 mm: 0.6 mm clearance. Recheck every real screw, PCB and washer stack. Tighten lightly to the support lands; do not crush PCB or PETG.

04 / Seat and retain the display

The bezel is not the glass support

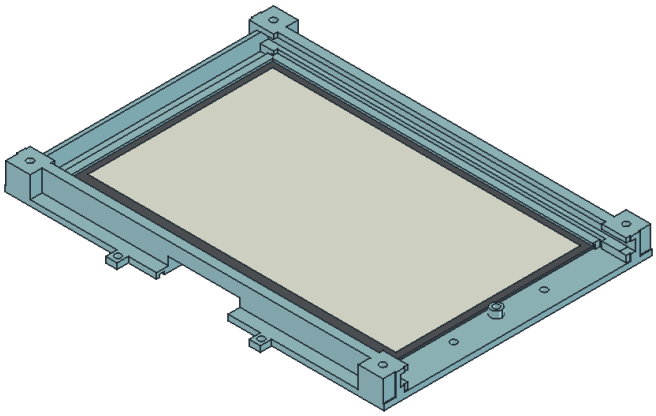

Raw panel installed under the three fixed lips.

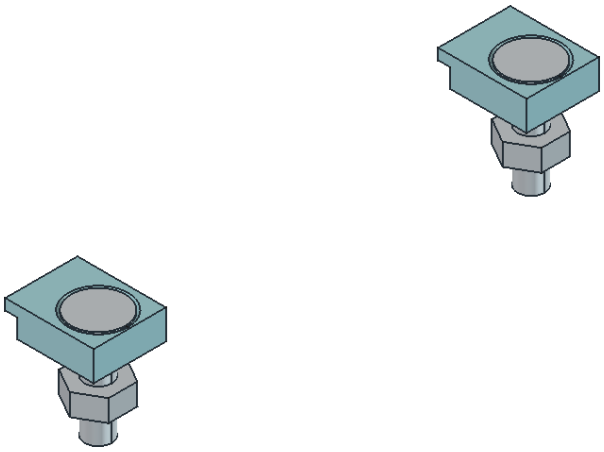

Two independent right-edge keepers and their hardware.

Leave both right keepers off. Place four loose, unglued 22 x 9 x 0.5 mm silicone pads at the modeled support locations; confirm those locations are permitted on the real display.

With flex at the lower edge, slide the raw panel gently from +X under the left, upper and lower lips. Never bend glass or use screw force to seat it. Trial fit with a dummy of measured thickness first.

Install two P06 keepers with M3 x 12 DIN 7991 countersunk screws from the front, ordinary M3 nuts from the rear. Head diameter is 6 mm, nominal height 1.7 mm; ISO 10642 substitutions may have larger heads.

The keeper feet tighten against the carrier. Their lips must retain without preloading glass. Confirm no pad wrinkle, screw tip, burr or lip presses the active panel. The panel must remain independently retained when the bezel is removed.

05 / Wire and test while open

Keep the flex relaxed and the latch accessible

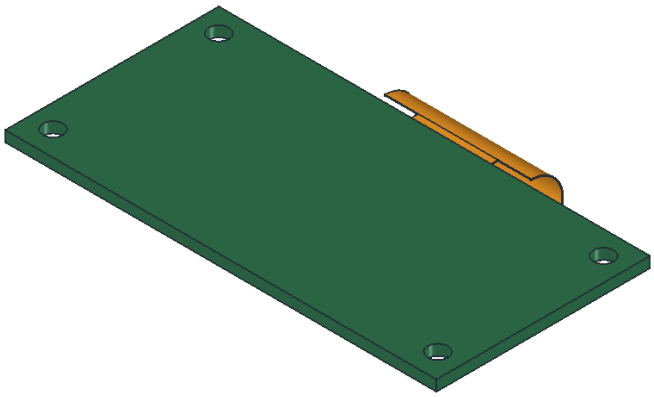

Guard removed: orange is the nominal raw tail and driver connection.

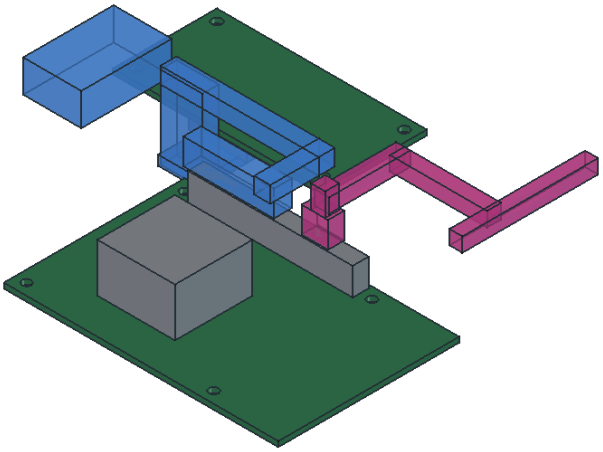

Blue: display GPIO lead. Magenta: independent button harness.

Route the raw tail through the ALREADY OPEN lower-edge corridor. Connect it at the nearby driver latch. A completed connector is never pulled through a closed hole.

Confirm contact side, latch opening, cable length and a gentle, uncreased route on the real parts. The model does not prove a safe bend radius or adequate free flex length. Stop if tension or folding is needed.

Use the matching supplied driver-to-GPIO cable and the exact revision pinout. The nominal GH route budgets 135 mm plus 35 mm slack; the current kit lists about 200 mm, but verify the delivered lead. Keep cables away from bolt bores, the heatsink and bezel sweep.

Test the display with the official external 5.1 V / 3 A USB-C PSU before fitting the bezel. Disconnect power again before completing mechanical assembly. The mains adapter stays outside the enclosure.

R5 / Independent ribbon cover

Connect the raw tail first; then fit P08

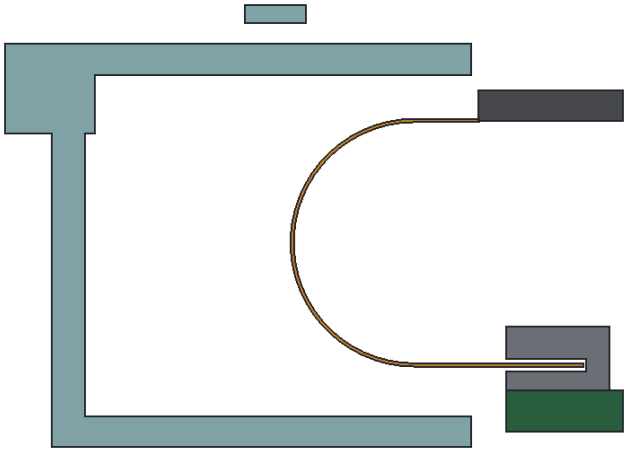

Section of the actual guard: orange is the nominal protected ribbon route.

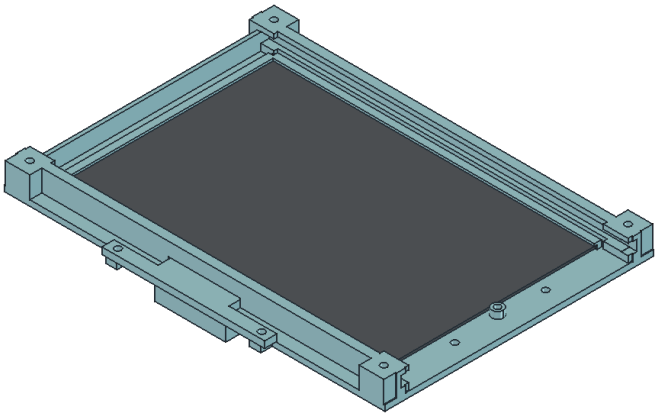

P08 covers the lower display tail independently of the button housing.

The unchanged nominal tail path uses a 2.5 mm straight root, a 180-degree rearward turn at radius 4.75 mm, and 6.577 mm straight into the connector including 3 mm assumed insertion. Total 24 mm. The drawing does not establish a permitted bend radius or usable free length.

With P08 off, verify contact side, stiffener length, root plane and latch entry on the delivered hardware. Connect without pulling or creasing. Move P08 toward +Y from below; its mounting bridge must seat without touching the ribbon or loading the glass.

Two M3x12 socket screws and plain washers enter the front at X +/-38, Y -73.5. Two M3 nuts sit behind the carrier ears. The roof stays 0.4 mm below the baseline bezel sweep. Tighten against PETG only.

For guard service, disconnect power, remove the feet and the two guard screws/washers/nuts, then withdraw P08 toward -Y. Button wiring remains in the independent right pod. Never pull the raw tail using the guard.

R5 / Internal sideways keys

P09 carrier; two rear screws; no external box

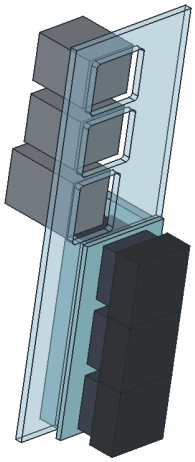

Thin button mounting face sits within the main frame outline.

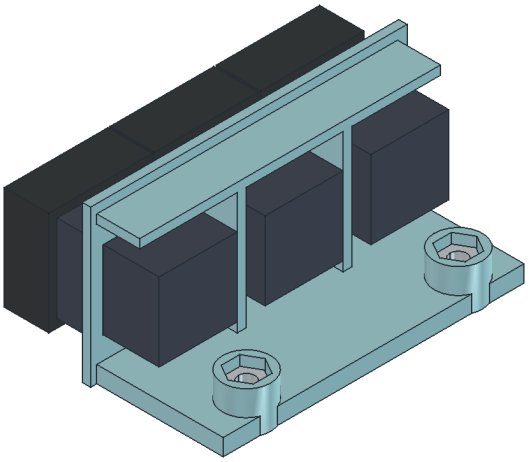

Open inner side gives access to clips, solder joints and captive nuts.

Use three full-height clicky Gateron Blue switches and three removable 1U DSA caps. Test C10 first. The local clip plate is 1.5 mm; key centres are 19 mm apart. Verify actual caps fit the 18.6 mm envelope, leave space between neighbours and return freely through their full stroke.

P09 replaces the projecting box. Its switch bodies, support webs and wiring sit inside the enclosure below the Pi ports. The thin face is at X100.2 mm, inside the X100.5 mm outer frame edge. A04 has a matching rear-edge notch, filled by this carrier; do not use the earlier R5 external-pod cutting file.

Before mounting, insert two M3 nuts into the carrier's hex pockets from its open front side. Fit and solder the three switches with P09 detached, away from the screen. Insulate all six joints. Inspect clip seating, wire slack and clearance to nut bosses before fitting caps.

Fasten the carrier to the INSIDE of the rear plate using two M3x10 socket screws and two plain washers from the outside. These reuse the former lid hardware. No separate P10 lid is needed: the main enclosure protects the joints. The rear plate now has two matching holes at X80, Y-12.5/-50.5.

R5 / Wire the controls

Four GPIO wires, entirely inside

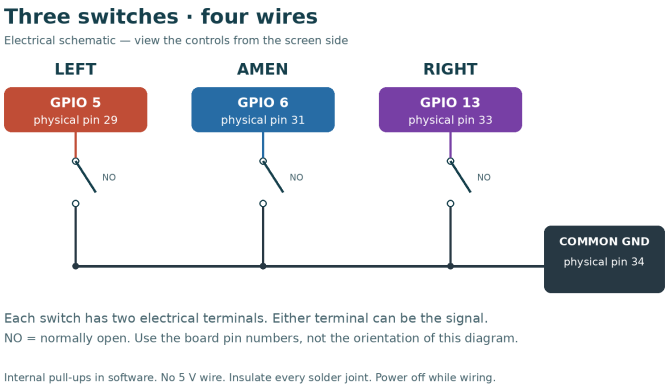

Each key closes its GPIO to shared ground; no power connection.

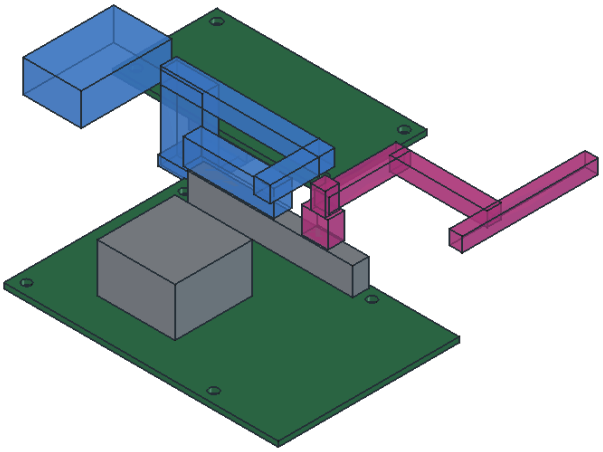

Magenta is the internal key harness; blue is the driver cable.

LEFT: BCM GPIO5 / physical pin29. AMEN: GPIO6 / physical pin31. RIGHT: GPIO13 / physical pin33. Shared ground: physical pin34. Use buttons.py with gpiozero for left/amen/right events and 30 ms debounce. Verify the actual driver revision's pinout before connecting.

Use four owned female jumper leads, initially about 30 cm each, and two short ground links. Solder the switch ends and insulate them. With power off, continuity-test each input: only its own key should connect it to ground; there must be no power pin connection.

Route from the switch terminals inward, behind the Pi near X54 / Y-23 / Z-28, then up to the lower GPIO edge. Keep wires away from the heatsink, compression spacers, nut pockets and raw screen tail. The side acrylic has no separate harness hole because all wiring is internal.

Leave at least 70 mm service slack so the rear and its attached keys can be eased back while supported, exposing the GPIO plugs for disconnection. A loose loop behind the Pi is preferred to a tight bend. Do not allow the rear to hang from the wires. Confirm your actual 30 cm leads are long enough before trimming.

06 / Fit the protective acrylic

Two sliding parts, two different grooves

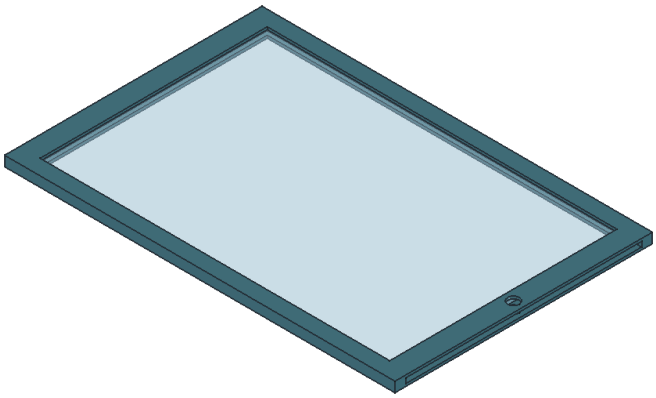

Front protector captured by the separate groove inside P02.

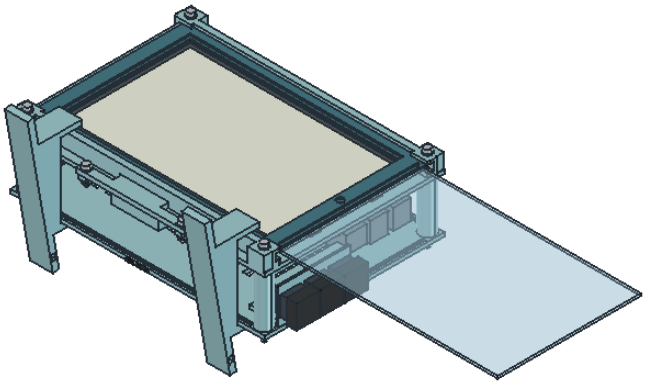

Protector alone withdrawn to +X; the bezel remains in its rails.

Cut A05 to 172 x 113 mm from measured 2 mm clear PMMA, with no holes. Deburr edges and test with the C09 groove coupon. Remove protective film only after fitting and clean without abrasive pressure.

Remove the M3 x 16 lock screw, large washer AND P07 bush. Slide the protector into the bezel groove from +X until it reaches the closed left end. The cover is 1.8 mm larger than the raw panel in each full dimension.

The front cover is not laminated to the display. Nominal back Z=8.28 mm, screen front Z=4.68 mm, giving 3.6 mm air gap. The ring floor/roof lips are each 1.2 mm and the cover slot has 0.2 mm space per face.

Hold the bezel while sliding the cover. With the bush removed both cover and bezel can move to the right. Do not let either loose part slide out unexpectedly.

07 / Install and lock the bezel

Remove all three loose lock pieces for service

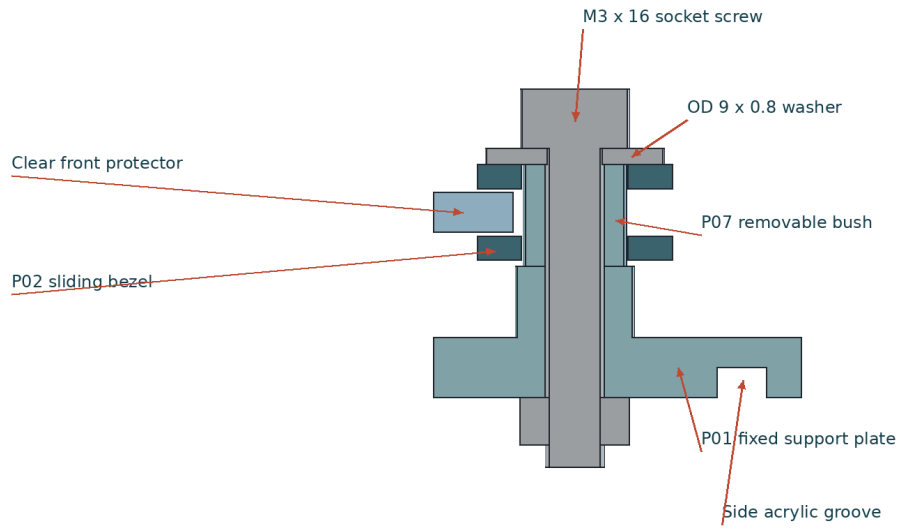

Actual CAD section, viewer above. Remove screw, washer AND bush before sliding.

Actual CAD section through the inboard lock and protector edge. Remove screw, washer AND bush for service.

Slide P02 in from +X through the top and bottom C rails until it meets the fixed left stop. It travels above the glass and independent keepers. It must slide smoothly without touching either.

Align the inboard bezel hole with the low carrier boss. Insert P07, the removable OD 5.2 mm bush, around the M3 screw. Fit the 3.2 x 9 x 0.8 mm DIN 9021 washer and M3 x 16 socket screw, with an ordinary M3 nut below the carrier.

P07 passes into the bezel hole and blocks its travel; its side also blocks the front acrylic from escaping through the open right edge. The washer bears on the bush. Do not use a normal 7 mm washer here.

For either sliding service operation, remove the screw, washer AND bush. The low fixed boss stays below the sweep. Nominal cover end play is 0.5 mm; nominal radial bezel-hole play around the bush is 0.2 mm.

08 / Close the frame

Side sheets first; rear and keys move together

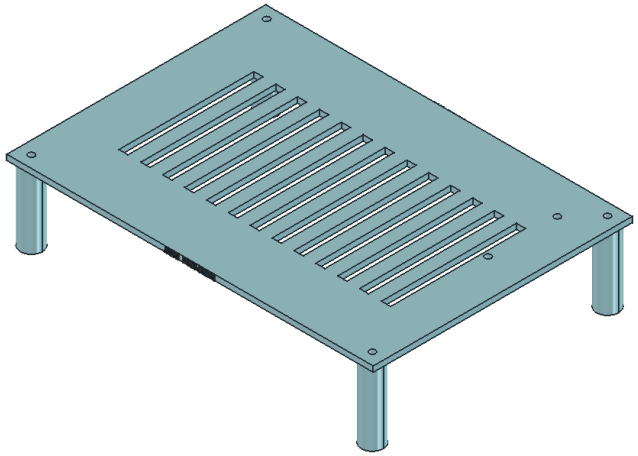

Four compression spacers retain the original main bolt stack.

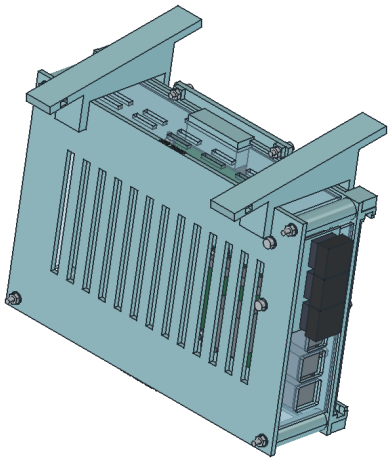

The button carrier mounts inside the rear with two separate screws.

Fit the four P04 spacers. Main screws enter from the front: four M3x65 socket bolts with four plain washers. Confirm at least 18 mm end thread. The front washers bear on the rail top, away from the acrylic.

With the rear removed, install A01-A04 in their front grooves. A04 has a rear-edge notch for the internal key carrier. Prepare the low power gate as shown later. Attach P09, switches and caps to the rear plate using its two M3x10 screws, washers and captive nuts.

Connect the four key leads to the Pi while the rear is supported open. Keep 70 mm service slack clear of all mating edges. Offer the rear and attached button carrier together toward +Z: the internal carrier enters A04's open rear notch while the rear grooves capture the side sheets.

Fit four rear washers and ordinary M3 nuts. Tighten gently onto the compression columns, not the acrylic. Baseline main stack is 60.78 mm under-head to nut outer face, leaving 4.22 mm projection on each 65 mm bolt. Stop if the internal carrier or a wire prevents closure.

09 / Five clear panels

A03 cable gate and A04 internal-control notch

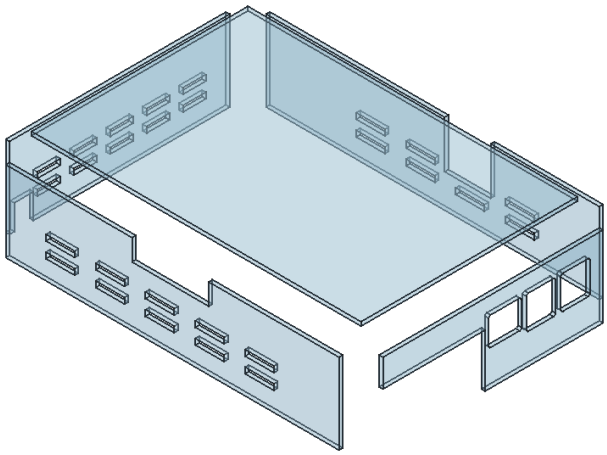

One front protector and four side strips; all 2 mm baseline PMMA.

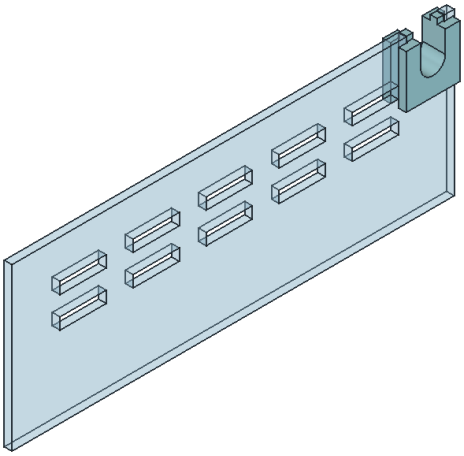

A03 rear-edge notch and removable low cable gate.

A05 front protector: 172 x 113 mm. A01 upper and A02 lower strips: 174 x 42 mm each. A03 left and A04 right strips: 115 x 42 mm each. These are blank dimensions; use the supplied exact DXF/SVG cut profiles for openings and vents.

R5 changes A03 with a low rear-edge cable notch and A04 with a rear-edge notch for the internal switch carrier. A04 remains one acrylic piece; the printed mounting face fills its lower opening. A01, A02 and A05 are unchanged. Use the new nest, CUT layer only, 1:1.

With feet removed and rear/keys lifted away, slide each side sheet toward +Z into its front groove. Refit the rear with its internal control carrier afterward. The side acrylic does not support the switches or carry clamp load.

Temporary desk use with a side sheet omitted is possible as requested; keep loose objects away. Refit it before backpack transport. The low gate is removable, so terminated cables can be seated before closing rather than forced through a tiny closed hole.

R5 / Feet and cable routing

Choose the route that matches the cable you actually have

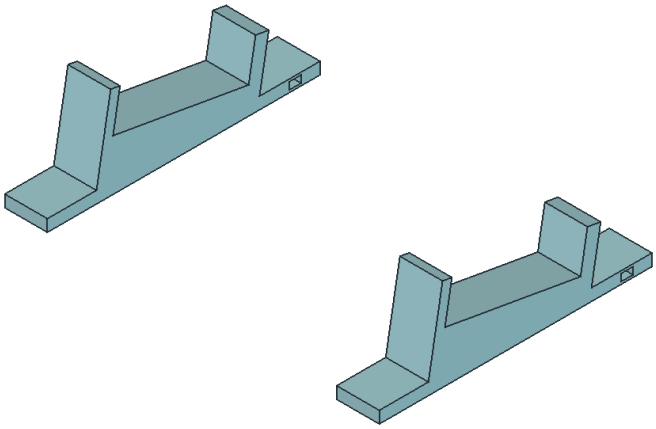

Two identical slide-off feet; rear tunnel accepts a small cable tie.

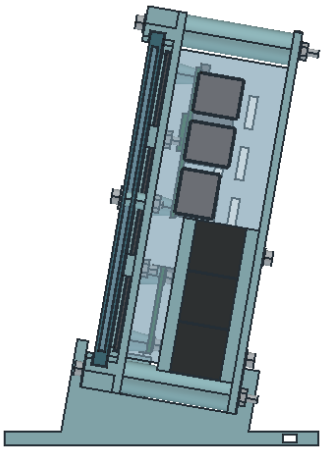

10-degree backward lean; front glass is clear of the desktop.

Print two P11 feet with their sole flat on the bed; the STLs are already oriented. Test C11 first. Slide the case down into both cradles at X +/-70 mm. The load rests on PETG frame edges; the acrylic and ribbon cover must float clear. Optional loose 0.5 mm silicone strips improve grip beneath the soles.

The feet are gravity-seated and removable, not carrying latches. Lift the body while supporting the feet or remove them first. Undo any cable tie before removal. Test with the actual PSU lead and USB/Ethernet cables on your desk; a strong pull can still tip or slide the device.

NOW: use the original upper power entry with the official straight USB-C plug. Route its external lead down the BACK with a relaxed loop and anchor it loosely at a foot. Leaving A01 off temporarily makes access easier. Do not fold the plug or force its strain relief into the enclosure.

LATER: use a short suitable flexible/right-angle USB-C extension after checking its real dimensions and voltage performance. The cable runs down the left internal corridor to P13. The 6.4 mm U seat accepts a cable, not an unspecified panel-mount socket. Keep the extension socket outside on a short pigtail; leave the mains adapter outside.

R5 / Fit the low cable gate

Seat the cable while the rear is open

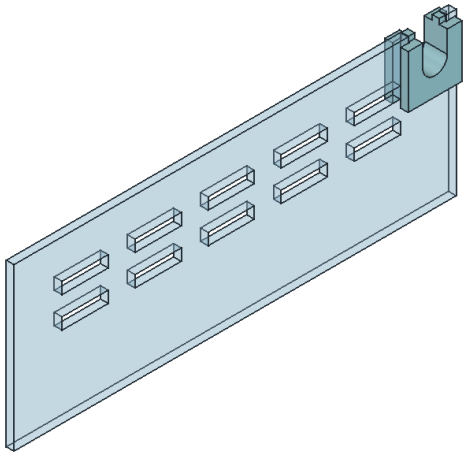

P13 surrounds A03's notch; the rear captures the small tongue.

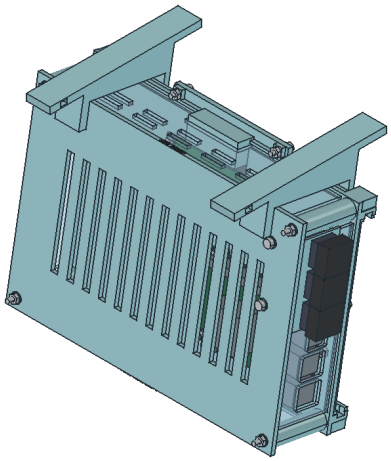

Low left outlet keeps the pull point nearer the desk.

With power disconnected and the rear removed, lift P13 out of A03's rear-edge notch. Lay the chosen cable into its open U-shaped seat; do not pass a whole connector through the 6.4 mm round opening. Fit P13 around the sheet, then capture the rear tongue when closing P03.

The gate has about 0.1 mm clearance around the 2 mm acrylic. It must not wedge the sheet. Deburr the cable seat and confirm the real jacket is smaller than the seat, with no pressure on the insulation. The gate guides the cable; it is not a clamp or strain relief.

Reserve the nominal 6 mm internal corridor along the left wall, away from the raw display ribbon and heatsink. Leave relaxed bends and service slack. A straight official PSU plug still needs the original upper exit; the new low route depends on an extension whose connector fit has actually been checked.

When no low-exit cable is fitted, P13 still closes most of the notch, leaving only the small cable seat. Secure the external insulated lead loosely at the foot, never on the raw screen tail. No extension was purchased or assumed included in the existing orders.

10 / Service and final checks

Disconnect power before opening

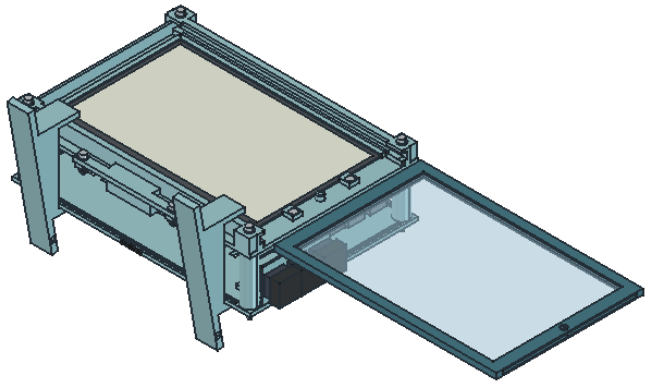

Remove screw, large washer and bush before sliding the bezel right.

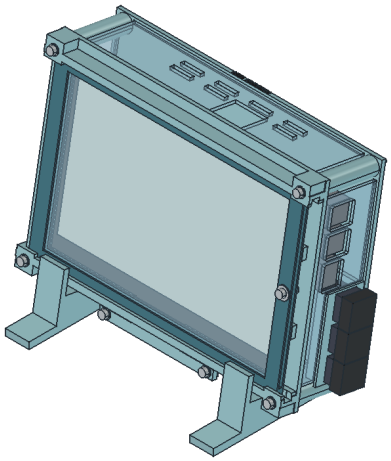

Check the complete device on the desk with its real cables attached.

Bezel service needs 206 mm free space to the right; protector-only service needs 184 mm. Remove the M3x16 lock screw, large washer AND P07 bush. The display stays retained by the carrier lips and two separate keepers. Support the sliding parts.

For internal service: remove feet and external plugs, support the rear, then remove the four main rear nuts/washers. Ease the rear and its attached keys back using the 70 mm service loop, unplug the four GPIO leads, and lift the rear away. The screen/ribbon/driver remain in place.

Check glass retention without preload, free keys, protected relaxed FPC, insulation, rear closure, loose acrylic fit and all nuts engaged. Confirm USB/Ethernet plug and latch access with real cables. Refit all panels for backpack transport and remove loose feet.

The CAD checks verify nominal geometry and access paths. Real print tolerance, actual driver revision, permitted ribbon bend, thermal behaviour and stability under cable pull remain physical checks. Start with fit coupons and a powered desk trial; do not use tightening force to compensate for a bad fit.

11 / Hardware and working files

Use the exact revision-matched shopping list

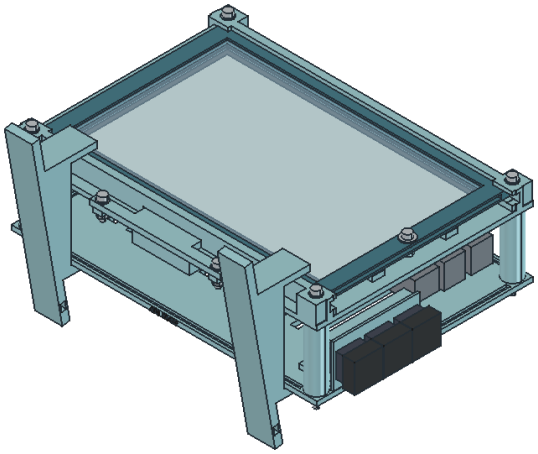

Completed OPEN assembly; four side panels omitted.

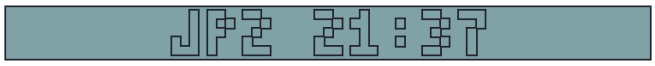

Raised JP2 21:37 on the outer rear edge; no removed plate material.

Installed CLOSED hardware: 4 x M3x65, 8 x M2.5x12, 2 x M3x12 DIN7991, 1 x M3x16, 2 x M3x12 socket and 2 x M3x10 socket screws for the internal button carrier. Also 11 M3 nuts, 8 M2.5 nuts, 12 M3 plain washers, 8 M2.5 plain washers and 1 M3 large OD9 x 0.8 washer.

Also obtain the matched 7.5-inch display/driver/lead kit, external official Pi4 PSU, clear acrylic and 0.5 mm silicone sheet. Pi, PETG and jumper leads are already owned. SHOPPING_SPEC.md separates installed quantities, purchase quantities and optional tools/SD/heatsink.

Cosmetic POKAPAPAJ 2137 / JP2 21:37 legends sit on the vertical rear edges. The flat print face, mating surfaces, vents and bearing faces stay clear. Relief is 0.4 mm; pixel pitch is 0.5 mm and strokes are 0.54 mm. Print a small-detail sample.

Editable master: Pokapapaj_2137.FCStd. Final printed parts live under PrintedParts; OptionalAcrylic contains A01-A05. Parameters column B controls geometry. Blue cells are calculated. Upright DESKTOP and alternate native views are under AssemblyViews.

Changing FCStd does not regenerate existing STL/STEP/DXF/SVG files. Preserve edited masters; export final solids manually or copy changed inputs to source/build.py and rebuild a matched package. Read VALIDATION.md for executed checks and remaining real-hardware gates.